OLYMPIC REGION CLEAN AIR AGENCY

2940 Limited Lane NW - Olympia, Washington 98502 - 360-539-7610 – Fax 360-491-6308

FORM 1- NOTICE OF CONSTRUCTION

TO CONSTRUCT - INSTALL - ESTABLISH OR MODIFY AN AIR CONTAMINANT SOURCE

Form 1 Instructions:

1. Please complete all the fields below. **This NOC application is considered incomplete until signed.**
2. If the application contains any confidential business information, please complete a Request of Confidentiality of Records (www.orcaa.org).
3. Duty to Correction Application: An applicant has the duty to supplement or correct an application. Any applicant who fails to submit any relevant facts or who has submitted incorrect information in a permit application must, upon becoming aware of such failure or incorrect submittal, promptly submit supplementary factors or corrected information.

Business Name: CITY OF ABERDEEN WASTEWATER TREATMENT PLANT (WWTP)	**For ORCAA use only**
Mailing Address: 200 East Market Street, Aberdeen, WA 98520	File No: 217 County No: 27 Source No: 104 Application No: 24NOC1645
Physical Address of Project or New Source: City of Aberdeen Wastewater Treatment Plant, 1205 W State Street, Aberdeen, WA 98520	Date Received: Received MAY 02 2024 ORCAA
Billing Address: City of Aberdeen, 200 East Market Street, Aberdeen, WA 98520	

Project or Equipment to be installed/established:

Digester boiler replacement

Anticipated startup date: 12 / 01 / 2024 Is facility currently registered with ORCAA? Yes ☐ No ☑

This project must meet the requirements of the State Environmental Policy Act (SEPA) before ORCAA can issue final approval. Indicate the SEPA compliance option:

- ☐ SEPA was satisfied by City of Aberdeen (government agency) on ___/___/___ (date) - Include a copy of the SEPA determination
- ☑ SEPA threshold determination by City of Aberdeen (government agency) is pending - Include a copy of the environmental checklist
- ☐ ORCAA is the only government agency requiring a permit - Include ORCAA Environmental Checklist
- ☐ This project is exempt from SEPA per _____ (WAC citation).

Name of Owner of Business: City of Aberdeen (Public Works Department)		Agency Use Only
Title: Nick Bird P.E., City Engineer		
Email: nbird@aberdeenwa.gov	Phone: 360-537-3218	
Authorized Representative for Application (if different than owner):		
Title:		
Email:	Phone:	
I hereby certify that the information contained in this application is, to the best of my knowledge, complete and correct.		
Signature of Owner or Authorized Representative: (sign in Blue Ink)		
	Date: 4/29/24	

IMPORTANT: Do not send via email or other electronic means. ORCAA must receive Original, hardcopy, signed application and payment prior to processing application.

OLYMPIC REGION CLEAN AIR AGENCY

2940 Limited Lane NW - Olympia, Washington 98502 - 360-539-7610 – Fax 360-491-6308

FORM 1D- Contact Information

Business Name City of Aberdeen	**FOR ORCAA USE** **FILE #** 217
Physical Site Address (Street address, city, state, zip) City of Aberdeen Wastewater Treatment Plant 1205 W State Street, Aberdeen, WA 98520	**CTY #** 27 **SRC #** 104 **Date Received** Received MAY 02 2024 ORCAA
Previous Business Name (if applicable)	

Contact Information

Inspection Contact	
Name Jesse Mottinger	Title WWS Manager
Phone 360-537-3285	Email jmottinger@aberdeenwa.gov
Billing Contact	
Name Becca Anderson	Title Deputy City Clerk
Phone 360-534-3219	Email rjanderson@aberdeenwa.gov
Emission Inventory Contact	
Name Jesse Mottinger	Title WWS Manager
Phone 360-537-3285	Email jmottinger@aberdeenwa.gov
Complaint Contact	
Name Nick Bird	Title City Engineer
Phone 360-537-3218	Email nbird@aberdeenwa.gov
Permit Contact	
Name Nick Bird	Title City Engineer
Phone 360-537-3218	Email nbird@aberdeenwa.gov

The **inspection contact** is the on-site person responsible for the everyday operation of the site and is available for inspections.
The **billing contact** is the person invoices are sent.
The **emission inventory contact** is the person requests for emissions information and material use information are sent.
The **complaint contact** is the person who receives and responds to complaints received on-site and who is contacted regarding complaints ORCAA receives.
The **permit contact** is the person responsible for filling out permit applications and receiving approval from ORCAA.

OLYMPIC REGION CLEAN AIR AGENCY

2940 Limited Lane NW - Olympia, Washington 98502
Telephone: (360)-539-7610 – Fax: (360)-491-6308
www.orcaa.org

FORM 11

Fill out all the applicable equipment information requested below and submit the appropriate fees.

BOILERS AND HEATERS

General Information

Facility Name: City of Aberdeen WWTP	**Contact Person:** Jesse Mottinger **Phone Number:** 360-537-3285 **Email:** jmottinger@aberdeenwa.gov
Facility Operating Schedule: 24 hrs/day, 7 days/wk, 52 wks/yr **Indicate days when operating:** [X] M [X] T [X] W [X] Thu [X] F [X] Sat [X] Sun	**Boiler Operating Schedule:** 6 hrs/day, 7 days/wk, 52 wks/yr Boiler available to operate but does not run continuously. **Indicate days when operating:** [X] M [X] T [X] W [X] Thu [X] F [X] Sat [X] Sun

Type of Boiler: Firebox Packaged Boiler (Low Pressure Heating Boiler)	
Manufacturer: Superior Boiler Works	
Model #: 3-5-306-W30	**Serial #:** TBD based on bid
Date of Construction: TBD based on bid	
Date of Installation: TBD based on Contractor Schedule	
Cost of Modifications: TBD based on bid	

Technical Specifications

Fuel Types (list all and attach MSDS):	1. Digester Gas 2. liquefied petroleum gas (propane) 3.		
Averge Heat Rate MMBtu/hr (HHV):	1. 1 MMBtu/hr 2. 3.		
Design Maximum Heat Rate MMBtu/hr (HHV):	1. 2.052 MMBtu/hr 2. 3.		
Heat Transfer Medium:	Temp 250 °F Input 180 Output 250	Pressure (psi) 30 Input Output	Flow Rate (specify units) Average 50 gpm Design Maximum 50 gpm
Fire Box	Average Temperature (°F) Volume of Fire box (ft^3) 22.67		

	Design Fire Box Gas Velocity (ft/s) _____ Residence Time in Fire Box (sec) _____
Stack Parameters	Stack Height (ft) 20 Stack diameter (ft) 1.25 Stack Gas Flowrate (ft^3/min) _____ At Average Firing Rate _____ At Maximum Firing Rate _____ Stack Temperature (°F) _____
Design Total Supplied Air (scfm):	**Design % Excess Air (vol):**

Emissions Data

Check all pollution controls proposed and complete the indicated forms:	☐ Multiclone (complete Form 31) ☐ Electrostatic Precipitator (complete Form 33) ☐ Wet Scrubber (complete Form 32) ☐ NOx controls (attach description) ☐ Baghouse (complete Form 12) ☐ Other (specify) _____
Items Vented to Air Pollution Control Device (check all that apply):	☐ Shaker Screens ☐ Elevators Head ☐ Elevator boot ☐ Hot aggregate bins ☐ Weigh Hopper/Mixer ☐ Dryer charge end ☐ Dryer discharge end ☐ Other (specify) _____

Pollutant	Maximum Concentrations	Maximum Emission Rates	
		lbs/hr	tpy
Oxides of Nitrogen (NO_x)	ppmv at 3% O_2 23	0.080	0.085
Particulate Emissions	gr/dscf at 7% O_2 NA	NA	NA
Carbon Monoxide (CO)	ppmv at 3% O_2 0	0	0
Sulfur Dioxide (SO_2)	ppmv at 3% O_2 62	0.0182	0.0192
Volatile Organics (VOCs)	ppmv at 3% O_2 NA	NA	NA

Provide the following information on separate sheets of paper:
1. Description of how fuel quality, temperature, air flowrate, excess air, and other operating variables are controlled.
2. Description of devices used to monitor air pollution controls and emissions.
3. An assembly drawing, dimensioned and to-scale, in plan, elevation and as many sections as needed to clearly show operation of the combustion unit.

See attachment

Filing Fee:

See https://www.orcaa.org/services/fee-schedules/ for an up-to-date list of fees

SUPERIOR BOILER WORKS, Inc.

SPEEC SHEET - WATER PAGE 1 OF 2

S.O. NO. 5090076 NAT.BOARD NO. 15639

DATE RECEIVED: SHIP WEEK OF 10-9-04

STATUS: WA&R [ ] RELEASED [X] DATE

JOB: ABERDEEN WASTE WATER TREATMENT

LOCATION: ABERDEEN, WA

SOLD TO: PACIFIC COMBUSTION ENGINEERING
700 SO. 37TH STREET, SUITE 101
WASHOUGAL, WA 98671

FINAL

SUBMITTALS REQ'D: 3 SETS PROPOSAL 5A90076

R&D SHEET [X] W.D. [X] SUBMITTAL NO. 6303

BURNER [ ] GAS PIPING [ ] OIL PIPING [ ]

DATE REQ'D: MANUALS REQ'D: 3

SPARE PARTS LIST INCLUDED IN OPERATION MANUALS.

MODEL: 3-X-306-W30-PFCF-LP/DG

NOMINAL HP OUTPUT MBH

SECTION IV

DESIGN PRESSURE 30 PSI 250 °F MAX. TEMP.

OPERATING PRESSURE PSI

NAMEPLATE: SUPERIOR PAINT BLUE

STACK DAMPER: [ ] W/LOCKING QUAD [ ] W/BEARINGS [ ]

STACK THERMOMETER N/S [L]

DIAL STEM RANGE °F

BOILER J-BOX [M] 12 x 12 x 4 RS [ ] LS [X]

PRIMARY L.W.C.O. RS [ ] LS [ ] TOP [X]

MODEL WARRICK 26MB1AOF [M]

WATER COLUMN BLOWDOWN VALVE(S): [ ]

[ ] N/S FIG. NO. SIZE

AUX. L.W.C.O.: RS [ ] LS [ ] TOP [ ]

MODEL N/S [ ]

[1]	OPERATOR	L6006A 1145	RANGE 100-240 °F	[M]
[1]	LIMIT	L4006E 1000	RANGE 110-290	[M]
[1]	FIRING RATE	T991A 1061	RANGE 160-260	[M]
[ ]	LOW FIRE HOLD		RANGE	[ ]

TURBULATORS: N/S TYPE

SAFETY VALVE(S): WATTS [L]

[1] 740 SIZE 1-1/2" x 2" SET @ 30 PSIG

[ ] SIZE SET @ PSIG

DRAIN VALVE(S): N/S [ ]

FIG. NO. SIZE

****

[ ] BLENDING PUMPS: N/S [ ]

SHUT-OFF VALVES: GATE: N/S

FIG. NO. SIZE

[ ] FLOW SWITCHES: N/S

PIPE INSULATION: N/S

STARTER N/S SIZE HEATER

STARTER MTG. [ ] STD. - LEFT HAND SKID

[ ] OTHER:

H.O.A. SWITCH [ ]

****

GAUGES: [L]

PRESSURE N/S FIG. NO.

DIAL RANGE PSI

W/GAUGE/TEST COCK [ ]

TEMPERATURE N/S FIG. NO.

DIAL RANGE °F

TRIDICATOR: MARSHALLTOWN FIG. NO. 105

DIAL 3-1/2" RANGE 60 x 70 x 260 °F

SPECIAL INSTRUCTIONS:

OPERATION OF THE BOILER WITH DELTA T HIGHER THAN 25 DEGREES F WITHOUT BLENDING PUMPS WILL VOID THE WARRANTY.

COMPLETED BY:		DATE
SALES:	JWP	7-28-04
ENG.:	MM	7-29-04

BOILER TO MEET THE FOLLOWING CODES:

CSD-1 [ ] UL LABEL [ ] [ ]

ELECTRICAL TEST ONLY [ ] FULL FIRETEST [ ]

[M] SHIPPED MOUNTED [N/A] NOT APPLICABLE

[L] SHIPPED LOOSE [N/S] NOT SUPPLIED

[P] PREPIPED/SHIPPED LOOSE [CF] CUSTOMER FURNISHED

REVISIONS

REV.	DATE	BY

SUPERIOR BOILER WORKS, Inc.

SPEC SHEET - GAS PAGE 2 OF 2

S.O. NO. 5090076 BURNER S/N

EQUIPMENT PURCHASED BY OTHERS FOR MOUNTING BY SUPERIOR BOILER WORKS

BURNER MFG POWER FLAME MODEL C2-GG-20B

FUELS: GAS TYPE LPG/DIGESTER GAS ALTITUDE ____ FT. OR LESS

FIRING RATE: GAS 2520 CFH OF 1000 BTU/CF

BURNER OPERATION: ON/OFF FIXED AIR ☐ ON/OFF W/L.F.S. ☐

HI-LOW-OFF W/L.F.S. ☐ FULL MODULATION ☒

LPG - 2#

AVAILABLE GAS PRESSURE DG - 12" WC VOLTAGE: 240 VOLT 60 HZ 3 PH

CODES: UL X CSD-1 X IRI ____ FM ____ NFPA 8501 ____ OTHER ____

CONTROL PANEL: MOUNTED ____ RS ____ LS ____

BOILER ____ SKID ____ BURNER ____ REMOTE ____

POWER ON SWITCH ____ FUEL CHANGEOVER SW. ____

MANUAL POTENTIOMETER ____

CONTROL TRANSFORMER ____ ☒ M

FLAME SAFEGUARD ____ ☒ M

FLAME DETECTOR ____ ☐

AMPLIFIER ____ ☐

MOTOR: HP STARTER SIZE HEATER

BLOWER ____ ____ ____ ____

IGNITION: GAS/ELECTRIC ____ TYPE ____

IGNITION TRANSFORMER: ____

VOLTAGE ____

GAS PILOT: SHUTOFF VALVE ____ SIZE ____

PRESSURE REGULATOR ____ SIZE ____

☐ SOLENOID VALVE ____ SIZE ____

AIR FLOW SWITCH ____

FIRING RATE MOTOR ____

CAM METERING ____

FGR PIPING: RS ☐ LS ☐ SIZE ____

SPECIAL INSTRUCTIONS:

USING EXISTING CONTROL PANEL, BMS/CCS IN THE FIELD.

DIGESTER GAS TRAIN TO BE S.S. PIPING.

INDICATING LAMPS ☐

		LAMP				ALARM
POWER ON	☐	____		ALARM	☐	____ ☐
FUEL ON	☐	____		LOW WATER	☐	____ ☐
CALL FOR HEAT	☐	____		HIGH WATER	☐	____ ☐
IGNITION ON	☐	____		FLAME FAILURE	☐	____ ☐
	☐	____		____	☐	____ ☐
	☐	____		____	☐	____ ☐

ALARM BELL ☐ HORN ☐ W/SIL. SW. ☐

GAS TRAIN: (2) RS X LS ____

MOUNTED X UNMOUNTED ____

(SIDE BY SIDE)

		SIZE
MAIN SHUTOFF COCK	____	____
PRESSURE REGULATOR	____	____
SAFETY GAS VALVE	____	____
ACTUATOR	____	
N.O. VENT VALVE	____	____
MAIN GAS VALVE	____	____
ACTUATOR	____	
CHECKING COCK	____	____
FIRING RATE VALVE	____	____
LOW GAS PRESS. SW.	____	RG ____
HIGH GAS PRESS. SW.	____	RG ____
MANIFOLD GAS PRESS. GA.	____	RG ____

SUPERIOR BOILER WORKS, Inc.

3524 East Fourth Street
PO Box 1527
Hutchinson, KS 67504-1527
Ph 620-662-6693
Fax 620-662-7586
www.superiorboiler.com

RECOMMENDED SPARE PARTS

Boiler No. 15639 Model 3-X-306-W30-PFCF-LP/DG

	QUANTITY REQUIRED	
904-001-002	4 EA	Gasket for Hand Holes
904-003-008	1 EA	Gasket for Cleanout Plug
904-001-009	1 EA	Gasket for Manway Opening
871-101-025	1 EA	Gasket Kit for Front Doors
5090076	1 EA	Gasket Kit for Rear Lid
910-019-001	2 EA	Sightport Lens Replacement
904-019-001	4 EA	Sightport Lens Gasket
907-001-001	1 EA	Can of Touchup Paint
904-010-010	1 EA	Can of Anti-Seize
910-002-004	1 EA	Tube Flue Brush
902-052-262	1 EA	Low Water Cut-Off Relay
902-020-003	1 EA	Operating Control
902-016-005	1 EA	Limiting Control
902-037-003	1 EA	Firing Rate Control

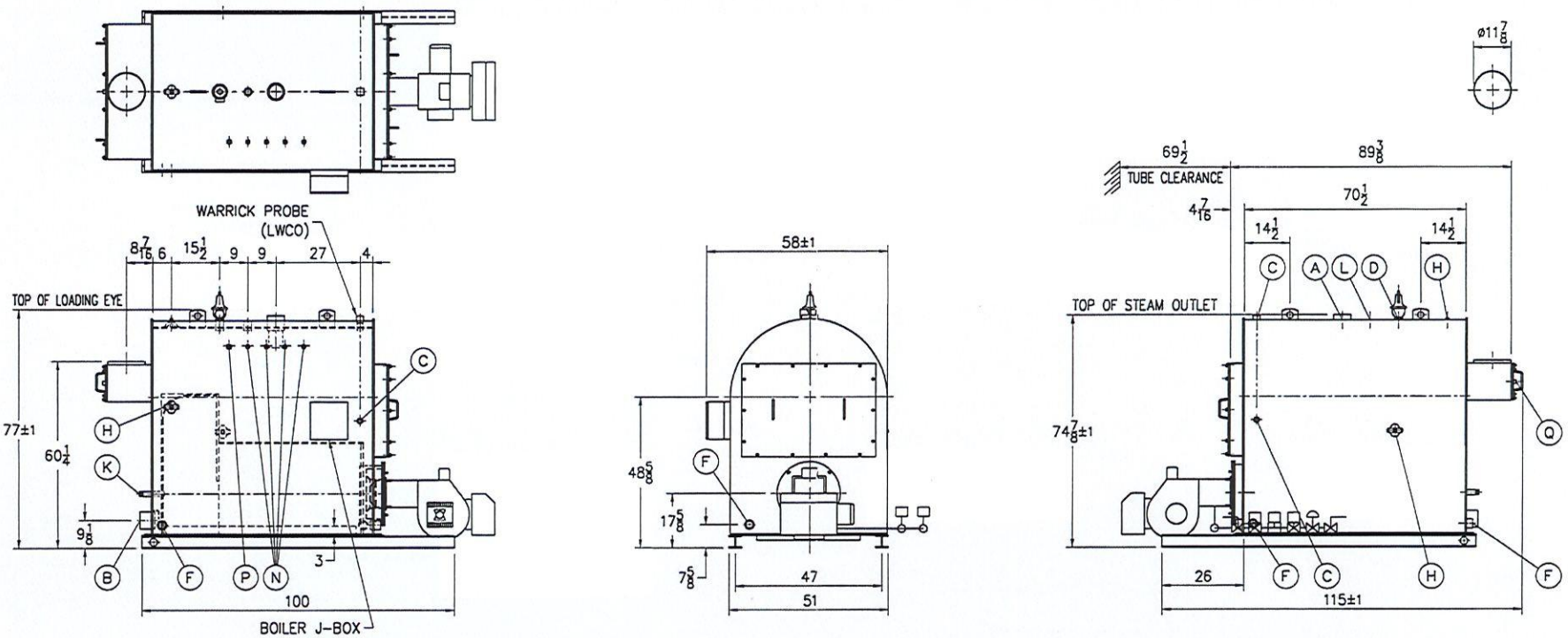

BOILER CONNECTIONS	
A.(1) WATER OUTLET	4" NPT
B.(1) WATER RETURN	4" NPT
C.(3) LWCO	1" NPT
D.(1) SAFETY VALVE	1 1/2" NPT
E.( ) SAFETY VALVE	
F.(4) BOILER DRAIN	2" NPT
G.( ) WATER CIRCULATION	
H.(3) HANDHOLE	3" x 4"
J.( ) MANWAY	
K.(1) SIGHTPORT	1 1/4" NPT
L.(1) AUXILIARY/ VENT	1 1/2" NPT
M.( ) LOW FIRE HOLD	
N.(4) AQUASTAT	1/2" NPT
P.(1) AQUASTAT	3/4" NPT
Q.(1) STACK TEMP	1/2" NPT
R.( )	
S.( )	

RATINGS & CAPACITIES	
HORSEPOWER	61
DESIGN PRESSURE	30 PSIG WATER
DESIGN TEMPERATURE	250 °F
GROSS OUTPUT	2,052 MBH
HEAT RELEASE: (FURNACE ONLY)	113,186 BTU/CuFt
RATED INPUT	2,565 MBH
HEATING SURFACE (ASME)	306 SqFt
FURNACE HEATING SURFACE	27.91 SqFt
FURNACE VOLUME:	
FURNACE ONLY	22.55 CuFt
TURN-AROUND ONLY	15.91 CuFt
WATER CAPACITY:	
(FULL) 433 Gal @	3,599 Lbs
SHIPPING WEIGHT:	6,900 Lbs

LTR	DATE	REVISION	BY

NOTES

1. ALL CONTROLS MOUNTED AS PER SPECIFICATION SHEET.
2. SPECIFICATION SHEET TAKES PRIORITY OVER R & D SHEET.
3. REAR DOOR SWING:
   (1) MIN SIDE, MAX REAR
   (2) MAX SIDE, MIN REAR
4. BOILER DESIGN CODE ASME SECTION IV.
5. BOILER INSULATED WITH 2" OF INSULATION AND JACKETED WITH 22 GAUGE STEEL.
6. ALL DIMENSIONS ARE ± 1/2" UNLESS OTHERWISE NOTED.

SUPERIOR BOILER WORKS, INC.
HUTCHINSON, KANSAS

CHECKED BY: D. RIDDER — DATE: 9-1-04
DRAWN BY: B. McCOY — DATE: 9-1-04

BOILER MODEL: OSAGE 3-X-306-W30-PFCF-LP/DG

SCALE: 1/34

DRAWING No: 5090076

REPRESENTATIVE: PACIFIC COMBUSTION ENG.

PROJECT: ABERDEEN WASTE WATER TREATMENT

THIS DRAWING IS THE PROPERTY OF SUPERIOR BOILER WORKS & SHALL NOT BE REPRODUCED IN PART OR IN WHOLE, & NONE OF ITS INFORMATION SHALL BE REVEALED WITHOUT PERMISSION OR TO THE DETRIMENT OF THE OWNER. IT MUST BE RETURNED UPON REQUEST.

ORIGINAL

NB 15639

SO 5090076

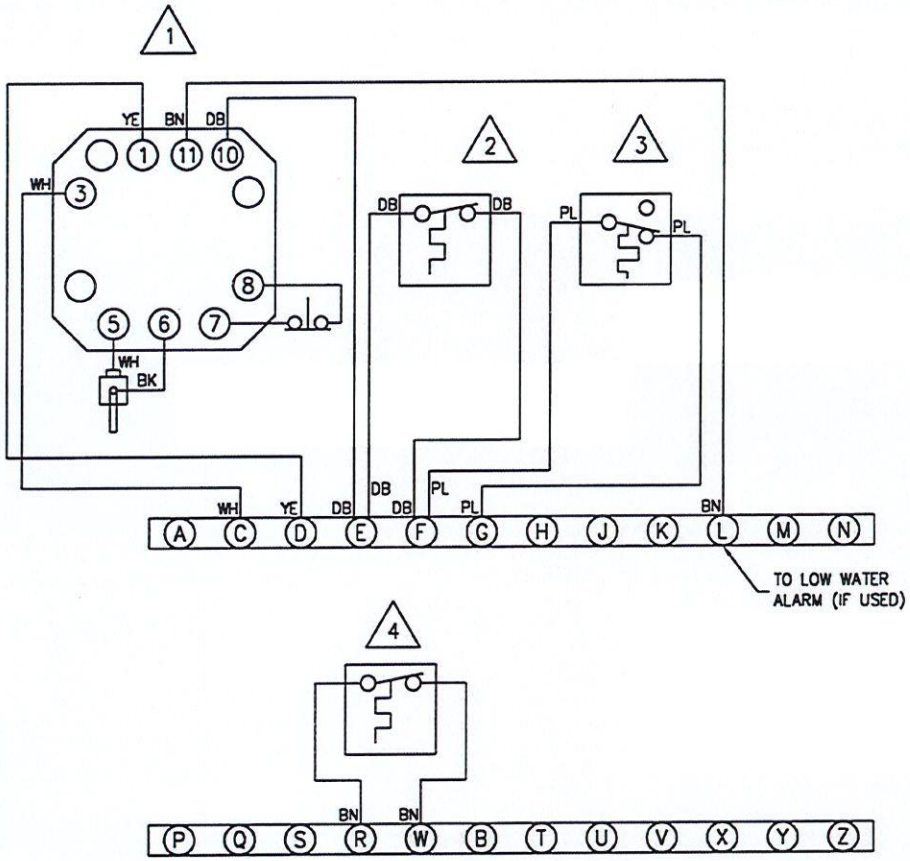

4	FIRING RATE CONTROL
3	OPERATING LIMIT
2	HIGH LIMIT
1	LOW WATER CUTOFF & ALARM

LOW FIRE HOLD SETTING:
200°F SET POINT–STEAM
150°F SET POINT–WATER
CLOSE ON RISE

ORIGINAL

ALL WIRING MUST BE IN ACCORDANCE WITH REQUIREMENTS OF LOCAL CODES AND THE NATIONAL ELECTRICAL CODE FOR CLASS 1 REMOTE CONTROL SIGNAL CIRCUITS.

COLOR CODE

DEVICE TERMINAL	FACTORY	BK – BLACK	PI – PINK
		BN – BROWN	PL – PURPLE
		DB – DARK BLUE	RD – RED
		GN – GREEN	TA – TAN
CONTROL PANEL	FIELD	GY – GRAY	WH – WHITE
		OR – ORANGE	YE – YELLOW

LTR	DATE	REVISION	BY

CHECKED BY K. DEAN	DATE 10-26-04	THIS DRAWING IS THE PROPERTY OF SUPERIOR BOILER WORKS AND SHALL NOT BE REPRODUCED IN PART OR IN WHOLE, AND NONE OF ITS INFORMATION SHALL BE REVEALED WITHOUT PERMISSION OR TO THE DETRIMENT OF THE OWNER. IT MUST BE RETURNED UPON REQUEST
DRAWN BY B. McCOY	DATE 10-26-04	
DRAWING NAME WARRICK LWCO, OP, HL, & FR		
SUPERIOR BOILER WORKS, INC. HUTCHINSON, KANSAS	SCALE NTS / CODE APPR'D	DRAWING No 5090076W

EQUIPMENT SHOWN G[illegible]AM IS ONLY PROVIDED AND MOUNTED BY POWER F[illegible] IF SPECIFICALLY CALLED FOR ON BURNER SPEC. SHEET.

CAUTION: ALL FIELD PIPED COMPONENTS MUST BE MOUNTED IN THE PROPER LOCATION AND PROPER DIRECTION OF GAS FLOW.

REFER TO SPECIFIC REGULATOR LITERATURE FOR RECOMMENDED STRAIGHT RUN OF PIPING BEFORE/AFTER REGULATOR AND SENSING LINE (IF APPLIC.)

NOTE: WHEN PILOT GAS PRESS. REG. IS [illegible] CERTIFIED DEVICE WITH INTEGRAL LEAK LIMITING ORIFICE; SUCH AS RV-20, RV-10 AND RV-12, VENT LINE FOR PILOT GAS PRESS. REG. MAY NOT BE REQ'D. UNLESS SPEC'D. BY OTHER CODES. (NO PROVISION FOR EXTERNAL VENTING ON RV-10 & 12) (RV-20 HAS OPTIONAL VENTING WITH P/N. 30912)

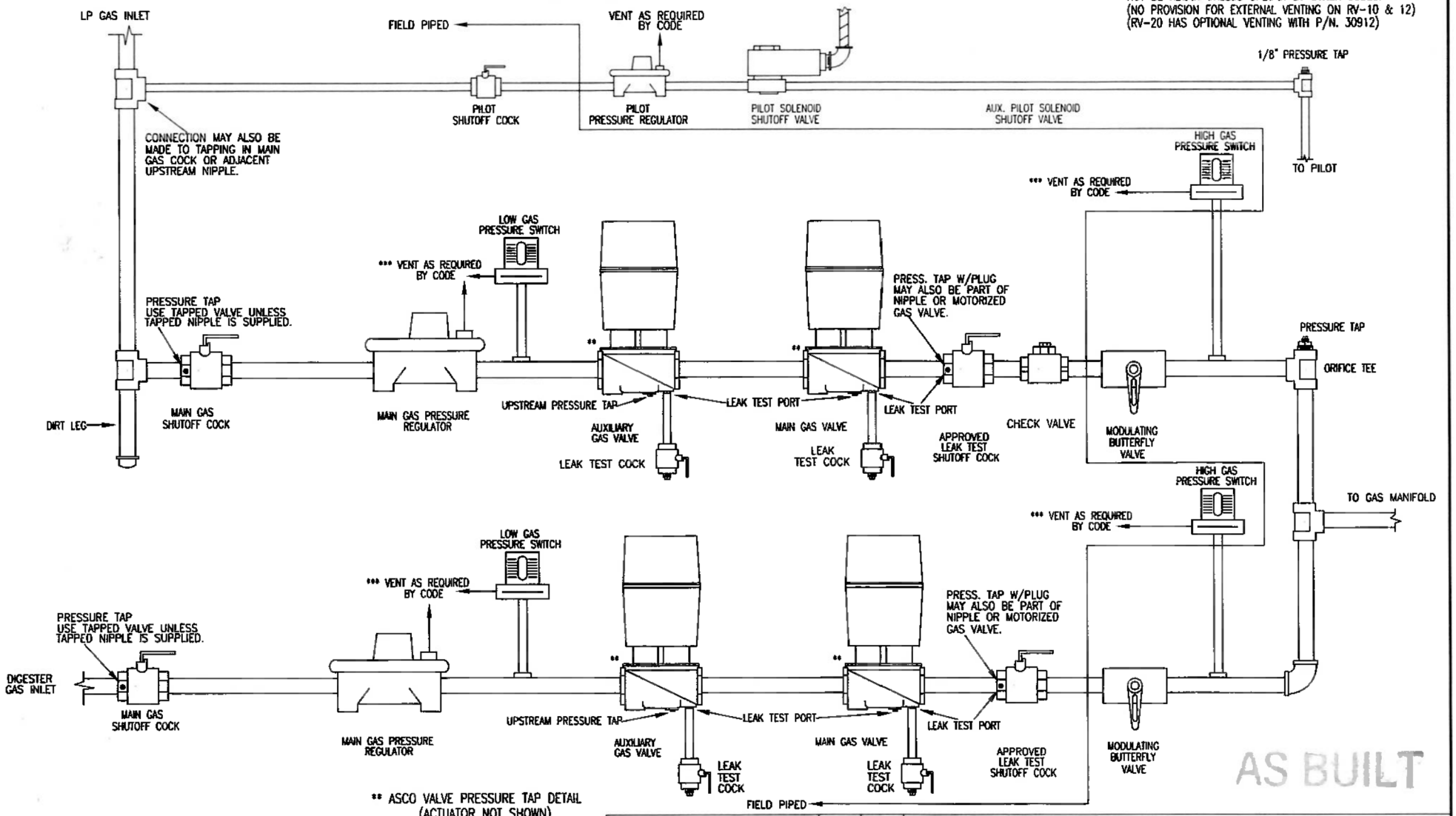

** ASCO VALVE PRESSURE TAP DETAIL (ACTUATOR NOT SHOWN)

NOTE: ARROW DENOTES GAS FLOW DIRECTION.

SINGLE VALVE WITH PROOF OF CLOSURE SWITCH MAY OMIT AUX. VALVE.

GAS TRAIN MAY BE PREPIPED IF STATED ON BURNER SPEC. SHEET.

*** EXCLUDES VENTLESS MODELS

REVISION	REV'D.	DATE

Power Flame Incorporated

2001 SOUTH 21st STREET
PARSONS, KANSAS 67357

PHONE (620) 421-0480
FAX (620) 421-0948

DRAWN: ZD	APPVD: CH	FILE: AC	DATE: 7/6/04	PARENT: 2767	DWG.: PDGG-2819

DRAWING PARAMETERS: N/A

TITLE: DUAL GAS PIPING FOR MODULATING BURNERS

JOB NAME:

CODE:

PROPRIETARY AND CONFIDENTIALITY NOTICE: THE CONTENTS OF THIS TEMPLATE CONSTITUTE PROPRIETARY AND CONFIDENTIAL INFORMATION OWNED BY POWER FLAME INCORPORATED. IT SHALL NOT BY REPRODUCED, IN WHOLE OR IN PART, AND SHALL NOT BE DISCLOSED TO ANYONE OUTSIDE POWER FLAME WITHOUT THE PRIOR EXPRESS APPROVAL OF POWER FLAME.

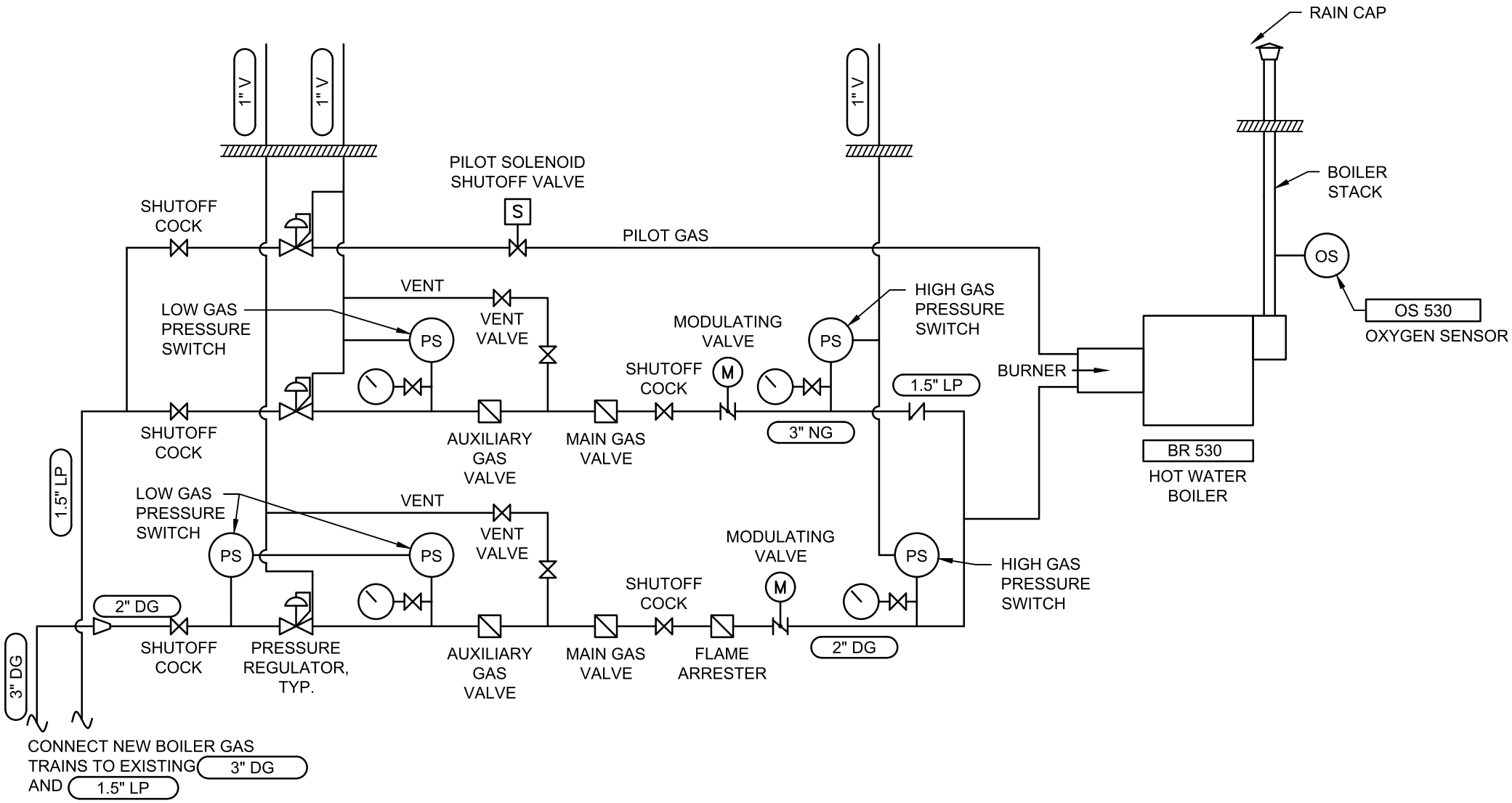

7
M501

BOILER GAS PIPING SCHEMATIC

NOT TO SCALE

An Ovivo Company

GAS CONTROL

VAREC BIOGAS 450 Series
FLAME TRAP ASSEMBLY

The 450 Series Flame Trap Assembly is designed for use on lines to flares and fired process units to safely prevent a flame flashback.

Introduction

The Varec Biogas 450 Series Flame Trap Assembly was designed for use on lines to flares and fired process units to safely prevent a flame flashback. The extensive range of sizes allows its use in many applications encountered in the typical tank farm, liquid storage facility, landfill or waste water treatment system.

The 450 Series has been designed for use on gases and should be installed no more than 15 feet from the end of the pipe nearest a possible source of ignition.

The Flame Arrester on the Varec Biogas 450 Series Flame Trap Assembly is uniquely designed with corrugated bank sheets contained within an extensible frame. The housing design allows for the removal of the entire bank assembly without the need for jack screws or other such methods which may cause stress on the piping system. The sheets can be easily inspected and cleaned.

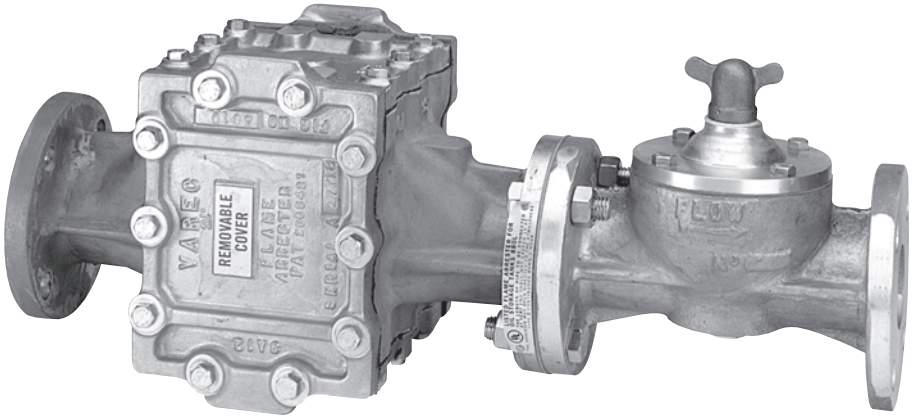

Flow curves are provided to assist you in selecting the proper size unit for your application requirements. In addition, Varec Biogas's applications engineering staff and factory trained representatives are always available to assist you.

Operation

The 450 Series Flame Trap stops the propagation of a flame by absorbing and dissipating heat through the surface area of the bank assembly. Ignited vapor attempting to pass through the arrester is forced through small passages within the bank assembly. Heat is absorbed, lowering the temperature of the gas below its ignition point and quenching the flame.

Should the flame continue to burn, the thermal element, rated at 260°F, melts, causing the spring loaded pallet of the thermal shut-off valve to positively close which prevents ignited gas from traveling downstream.

The thermal element can be easily replaced without disassembling the valve so that the unit may be quickly returned to service after a flashback. The 450 Series was designed primarily for severe service applications where frequent cleaning is expected.

Design Features

- Low Pressure Drop Across Unit
- Unique Design Allows for Cleaning of Element
- Passive Device for Positive Flame Arrestment
- Extensive Range of Materials Available
- Spring Actuated Thermal Valve
- Available in Sizes 2" - 12" (50 - 300 mm)
- Removable / Replaceable Bank Assembly

Varec Biogas Inc. reserves the right to change product design and specifications without notice.
Copyright © 2021 by Varec Biogas Inc. An Ovivo Company.

Specifications

Materials
Valve Body
356 T6 Low Copper Aluminum

Valve Internals
Low Copper Aluminum
Stainless Steel

Thermal Element
260° F Metal Aluminum

Flame Arrester Bank
Low Copper Aluminum Extensible Frame with Aluminum Bank Sheets

Low Copper Aluminum Extensible Frame with 316 SS Bank Sheets

Pressure Rating
Leak Proof to 5 psi (kPa) Standard

Flanged Connections
125 lbs. ANSI FF Flange

Flame Arrester Configuration
NET FREE AREA
Three to Four Times the Corresponding Size Standard Pipe

BANK ASSEMBLY
Extensible Bank Frame with Corrugated Rectangular Shaped Bank Sheets

DRAIN CONNECTION (Horizontal)
1/2" NPT Connection

LOCATION
Within 15 Feet (4.6 m) of Flame Source

Flow Curves 450 SERIES (2" - 8" Sizes)

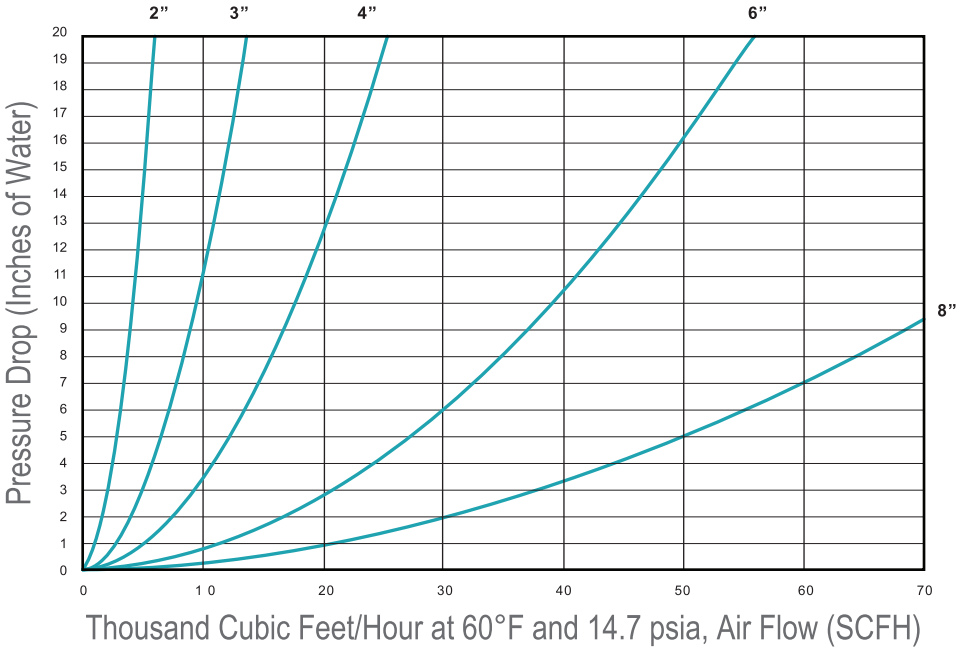

Flow Curves 450 SERIES (10" - 12" Sizes)

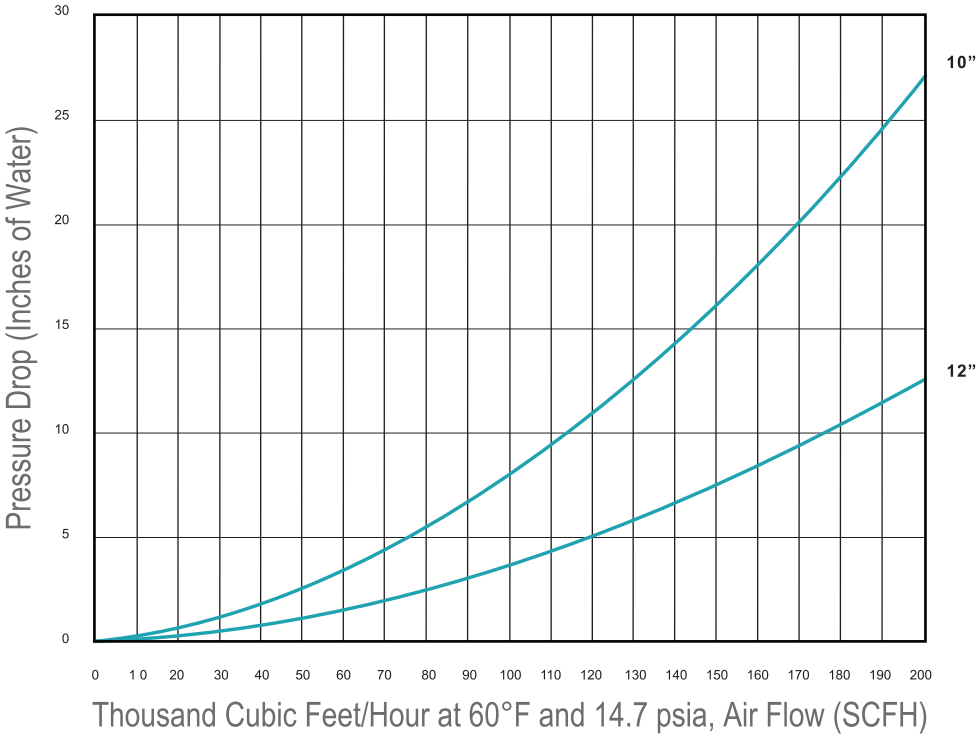

Varec Biogas Inc. reserves the right to change product design and specifications without notice.
Copyright © 2021 by Varec Biogas Inc. An Ovivo Company.

Specifications

Horizontal Installation
Dimensions and Weights, inches [mm] and lbs. (kg)

Size Code	02	03	04	06	08	10	12
Nominal Pipe Size	2 [50]	3 [75]	4 [100]	6 [150]	8 [200]	10 [254]	12 [300]
A	9 [229]	11 3/4 [298]	14 [356]	16 3/8 [416]	21 5/8 [549]	24 [610]	31 [787]
B	5 3/8 [137]	7 1/4 [184]	9 [229]	10 3/4 [273]	14 3/8 [365]	16 [406]	20 [508]
C[1]	23 1/4 [591]	26 [660]	31 3/8 [797]	39 3/8 [1000]	54 3/8 [1381]	63 5/16 [1608]	67 3/8 [1711]
D	4 5/16 [110]	5 5/8 [143]	7 [178]	8 1/4 [210]	10 3/4 [273]	11 7/8 [302]	14 1/2 [368]
E	19 [476]	23 1/4 [591]	28 1/8 [715]	31 1/8 [790]	38 5/8 [981]	41 5/8 [1057]	50 [1270]
Shipping Weight	45 (20)	70 (32)	100 (45)	150 (68)	280 (128)	360 (164)	500 (227)

NOTE 1: (±)1/4"

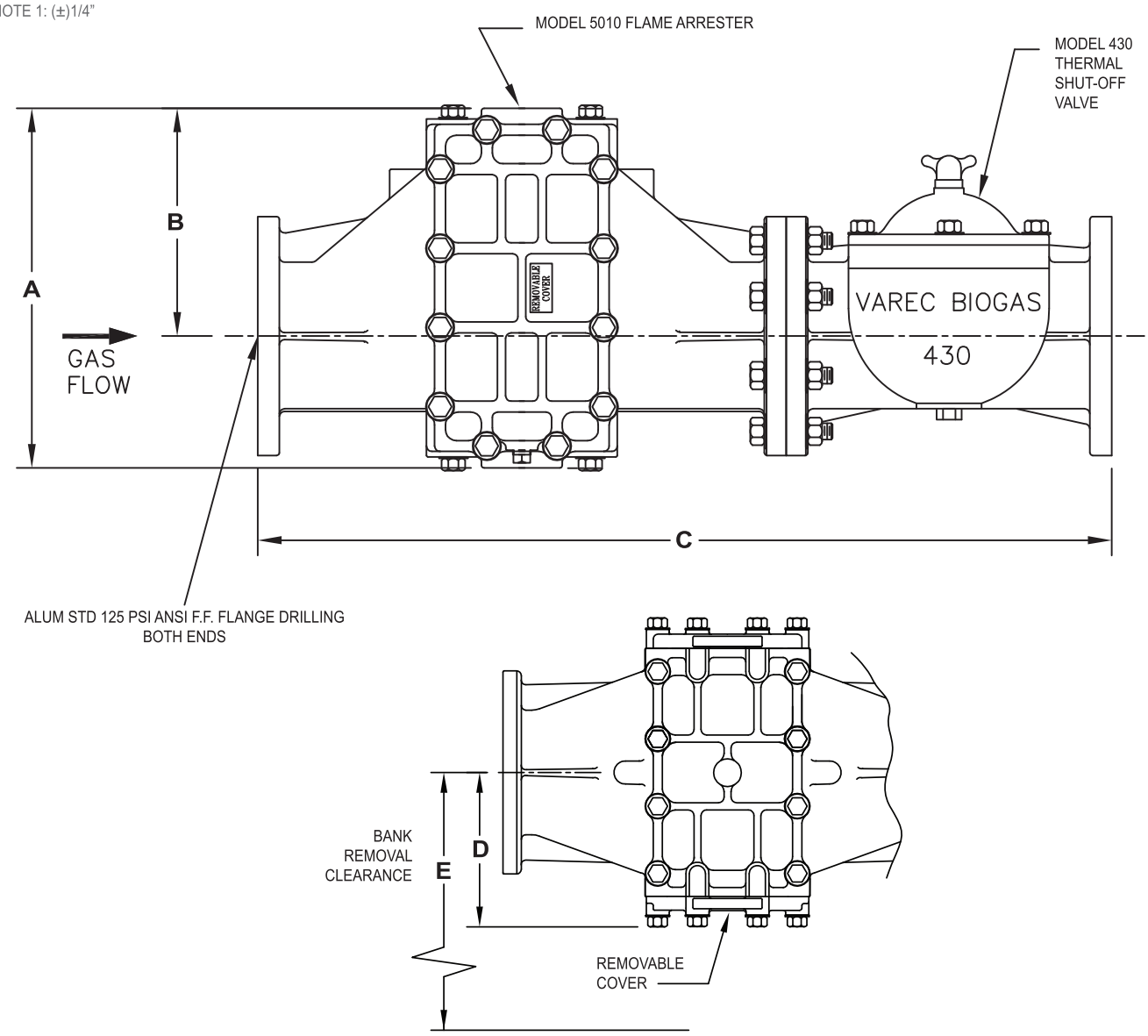

Varec Biogas Inc. reserves the right to change product design and specifications without notice.
Copyright © 2021 by Varec Biogas Inc. An Ovivo Company.

Specifications

Vertical Installation
Dimensions, inches [mm]

Size Code	02	03	04	06	08	10	12
Nominal Pipe Size	2 [50]	3 [75]	4 [100]	6 [150]	8 [200]	10 [250]	12 [300]
A	4 5/16 [110]	5 3/4 [146]	7 3/8 [187]	8 3/8 [213]	10 7/8 [276]	11 7/8 [302]	14 5/8 [371]
B	19 [483]	23 1/4 [591]	28 1/8 [714]	31 1/8 [791]	38 5/8 [981]	41 5/8 [1057]	50 [1270]
C[1]	21 3/8 [543]	23 7/8 [606]	28 [711]	36 1/2 [927]	49 1/2 [1257]	56 3/16 [1427]	67 3/8 [1711]
Shipping Weight	40 (18)	65 (29)	95 (43)	135 (61)	260 (118)	330 (150)	475 (215)

NOTE 1: (±)1/4"

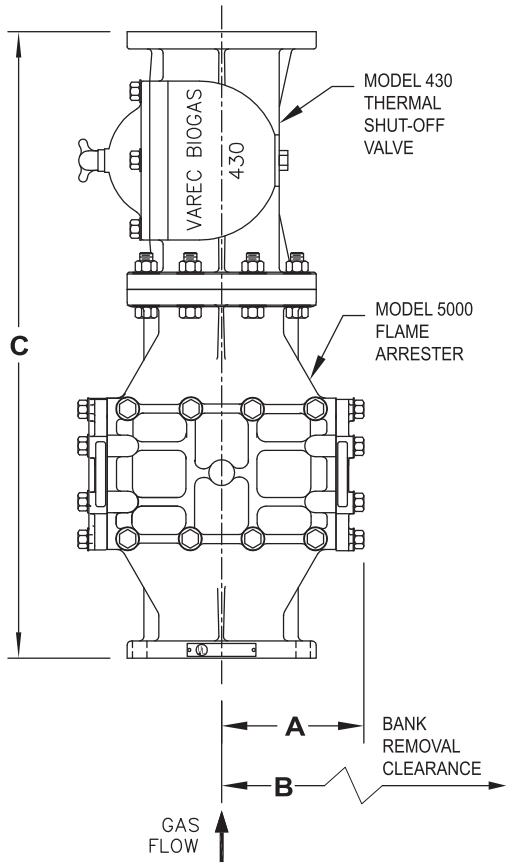

Ordering Information

Model	Description
450	Flame Trap Assembly

Code	Size
02	2”
03	3”
04	4”
06	6”
08	8”
10	10”
12	12”

Code	Flame Arrester Bank Sheet Material
1	Aluminum
2	Aluminum Frame, 316 SS Sheets

Code	Mounting
1	Horizontal Installation
2	Vertical Installation

Code	Hardware Material
*	Zinc Plated Steel
S	Stainless Steel

450	06	1	1	*	(Example)

Example: 450 Series Flame Trap Assembly, 6” Size, Aluminum Bank Sheets, Horizontal Installation, Zinc Plated Steel Hardware.

Varec Biogas Inc. reserves the right to change product design and specifications without notice.
Copyright © 2021 by Varec Biogas Inc. An Ovivo Company.

An Ovivo Company

VAREC BIOGAS 246 Series
LOW PRESSURE MANUAL DRIP TRAP

The 246 Series Drip Traps are designed for the collection and safe manual removal of condensate from gas.

Introduction

The Varec Biogas 246 Series Drip Traps are designed for the manual collection and safe removal of condensate from gas. Condensate removal from gas piping systems is necessary to protect piping and equipment from possible damage caused by corrosion or water hammer. In addition, water lying in low spots in the pipe can restrict gas flow resulting in increased pressure drop. Varec Biogas drip traps should be installed at all low points in horizontal pipe runs for convenient removal of accumulated condensate.

The Series 246 Drip Trap is suitable for working pressures up to 5 psig (34.5 kPa). For systems with higher pressure ratings, see the product data sheet for Varec Biogas 247 Series High Pressure Drip Traps.

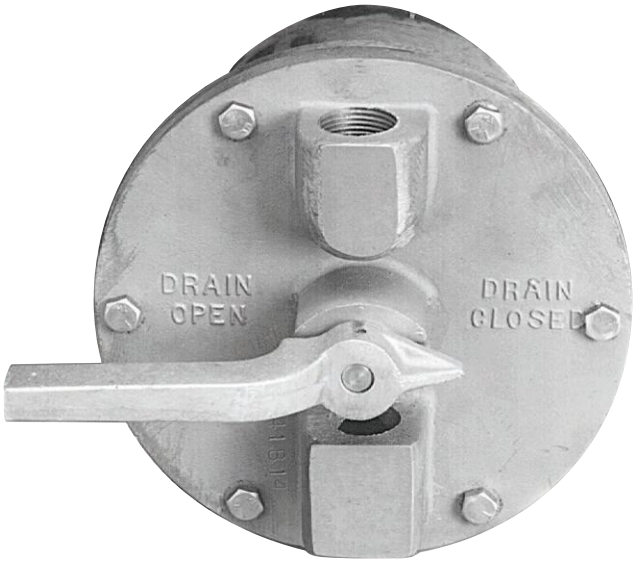

Operation

The Varec Biogas 246 Series Drip Traps are designed to prevent gas from escaping while draining. The disc, ports, and “O” ring seals are positioned to block gas before opening the drain outlet ensuring that gas does not escape. Simple rotation of the 246 Series handle allows accumulated condensate in the drip trap reservoir to be drained manually. The disc position ensures that when the trap is draining, the inlet port is blocked.

For installations that are not easily accessible to manual operation, the 246AT Model drip trap is available. See Product Data Sheet for the 246AT.

Design Features

- Corrosion Resistant Aluminum Construction
- Positive Seal Against Gas Escape
- 2.5 and 6 Quart Reservoir Capacity
- 5 psig (34.5 kPa) Working Pressure
- Manual Operation

Varec Biogas Inc. reserves the right to change product design and specifications without notice.
Copyright © 2021 by Varec Biogas Inc. An Ovivo Company.

Specifications

Dimensions and Weight, inches [mm] and lbs. (kg)

Sized Code	2	6
A	7 [178]	7 [178]
B	8 3/4 [222]	8 3/4 [222]
C	11 3/8 [171]	12 3/8 [314]
D	6 3/4 [171]	7 3/4 [197]
Shipping Weight	13 (5.9)	17 (7.7)

Connections
Inlet and Outlet 1” NPT Threaded

Materials
Body, Cover Plate, Disc & Handle
356 T6 Low Copper Cast Aluminum

Internal Parts & Hardware
Stainless Steel

“O” Rings
Neoprene

Maximum Working Pressure
5 psig (34.5 kPa)

Reservoir Sizes
2.5 Quart (2.4 L)
6.0 Quart (5.7 L)

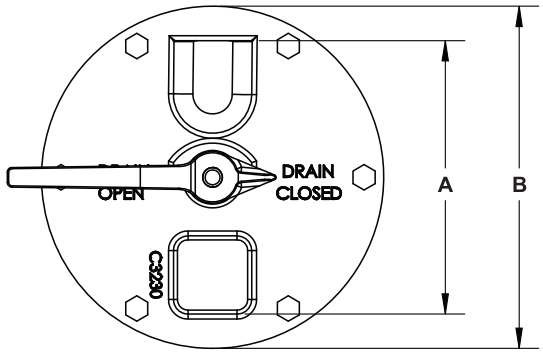

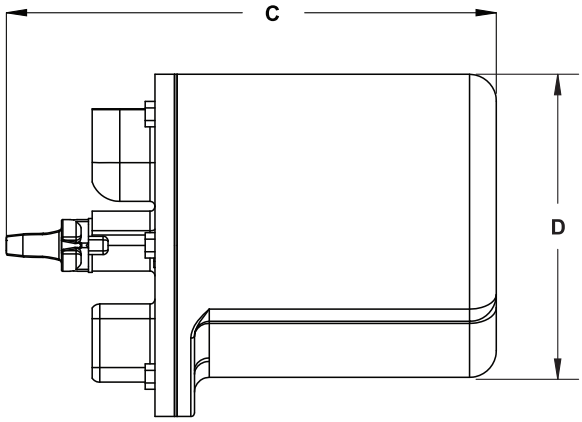

Ordering Information

Model	Description
246	Low Pressure Manual Drip Trap

Code	Size
2	2.5 Quart (2.4L)
6	6.0 Quart (5.7L)

246 6 (Example)
Example: 6 Quart Low Pressure Manual Drip Trap

Varec Biogas Inc. reserves the right to change product design and specifications without notice.
Copyright © 2021 by Varec Biogas Inc. An Ovivo Company.

Compressed Air and Gas Filtration Products

Catalog 1300-300-06/USA

Finite®

We are dedicated to fulfilling your compressed air filtration requirements. We know that every application requires specific needs and we have the products ready to address them.

If you can't find a specific compressed air/gas filter, dryer, or accessory in this catalog, call 1-800-521-4357. Our knowledgeable technical assistance department will be happy to assist you!

Inquires via e-mail are also encouraged. E-mail inquiries to finitefilter@parker.com. We can provide solutions that will remove contaminants such as oil, water and particulate from your compressed air and gas lines, saving you time and money!

WARNING

FAILURE OR IMPROPER SELECTION OR IMPROPER USE OF THE PRODUCTS AND/OR SYSTEMS DESCRIBED HEREIN OR RELATED ITEMS CAN CAUSE DEATH, PERSONAL INJURY AND PROPERTY DAMAGE.

This document and other information from Parker Hannifin Corporation, its subsidiaries and authorized distributors provide product and/or system options for further investigation by users having technical expertise. It is important that you analyze all aspects of your application including consequences of any failure, and review the information concerning the product or system in the current product catalog. Due to the variety of operating conditions and applications for these products or systems, the user, through its own analysis and testing is solely responsible for making the final selection of the products and systems and assuring that all performance, safety and warning requirements of the application are met.

The products described herein, including without limitation, product features, specifications, designs, availability and pricing are subject to change by Parker Hannifin Corporation and its subsidiaries at any time without notice.

Offer of Sale

The items decribed in this document are hereby offered for sale by Parker Hannifin Corporation, its subsidiaries or its authorized distributors. This offer and its acceptance are governed by the provisions stated in the "Offer of Sale."

Copyright 2006, Parker Hannifin Corporation, All Rights Reserved

City of Aberdeen WWTP

Digester Boiler Replacement Project Description

The City of Aberdeen WWTP utilizes anaerobic digestion in a single anaerobic digester to produce Class B biosolids. The digested waste streams include waste primary sludge (WPS), scum and waste activated sludge (WAS) produced at the plant. Prior to digestion, the WPS and WAS are pre-thickened via gravity and a rotating screen thickener. The existing digester has a diameter of 50 feet with a maximum side water depth of 43 feet. The digester is equipped with a spiral heat exchanger, boiler, two recirculation pumps, waste gas burner, and pumped mixing system.

The mesophilic anaerobic digestion process requires the temperature within the digesters to be maintained at 35 degrees C. This is accomplished by burning the digester gas produced in the digestion process in a fire tube boiler that heats water that is then used to heat digested sludge being recirculated through a water-to-sludge spiral heat exchanger. This system is also capable of using liquefied petroleum gas (propane) as a backup to digester gas in the event that adequate digester gas is not available.

The current digester gas boiler was installed in 2004. The boiler and appurtenances will be replaced with a new similarly sized firebox boiler, gas and burner trains, a new pneumatic 3-way mixing control valve, and boiler controls. The remaining existing digester gas heating system equipment including: boiler water pumps, mixing control valves, air separators, temperature sensors and temperature transmitter will remain and will be utilized for control and monitoring of the new boiler system. All proposed work will take place within the existing Digester Building.

The City of Aberdeen WWTP is located on several parcels. See the attached site map. The WWTP site includes Parcels No. 029407400000, 029901800402, 029901800405 and 029901800407. The proposed digester system is located in Parcel 029901800402.

SEPA[1] Environmental Checklist

Background

Find help answering background questions[2]

1. **Name of proposed project, if applicable:**

   City of Aberdeen WWTP Digester Gas Boiler Replacement

2. **Name of applicant:**

   City of Aberdeen Public Works Department

3. **Address and phone number of applicant and contact person:**

   Nick Bird

   City Engineer

   200 East Market

   Aberdeen, WA 98520

   360-537-3218

   nbird@aberdeenwa.gov

4. **Date checklist prepared:**

   01/16/2024

5. **Agency requesting checklist:**

   Olympic Region Clean Air Agency (ORCAA)

6. **Proposed timing of schedule (including phasing, if applicable):**

   Application is being provided per ORCAA requirement to submit a Notice of Construction for replacement of the existing boiler.

[1] https://ecology.wa.gov/Regulations-Permits/SEPA/Environmental-review/SEPA-guidance/Checklist-guidance
[2] https://ecology.wa.gov/Regulations-Permits/SEPA/Environmental-review/SEPA-guidance/SEPA-checklist-guidance/SEPA-Checklist-Section-A-Background

7. **Do you have any plans for future additions, expansion, or further activity related to or connected with this proposal? If yes, explain.**

   No.

8. **List any environmental information you know about that has been prepared, or will be prepared, directly related to this proposal.**

   No additional information prepared beyond that included with application packet.

9. **Do you know whether applications are pending for governmental approvals of other proposals directly affecting the property covered by your proposal? If yes, explain.**

   No.

10. **List any government approvals or permits that will be needed for your proposal, if known.**

    ORCAA Notice of Construction approval.

11. **Give brief, complete description of your proposal, including the proposed uses and the size of the project and site. There are several questions later in this checklist that ask you to describe certain aspects of your proposal. You do not need to repeat those answers on this page. (Lead agencies may modify this form to include additional specific information on project description.)**

    This application is for replacing the existing digester gas boiler in use at the WWTP with a newer, more reliable generation of boiler.

12. **Location of the proposal. Give sufficient information for a person to understand the precise location of your proposed project, including a street address, if any, and section, township, and range, if known. If a proposal would occur over a range of area, provide the range or boundaries of the site(s). Provide a legal description, site plan, vicinity map, and topographic map, if reasonably available. While you should submit any plans required by the agency, you are not required to duplicate maps or detailed plans submitted with any permit applications related to this checklist.**

    The boiler is located at the City's Wastewater Treatment Facility at 1205 West State Street, Aberdeen, WA 98520. The boiler is located within the boiler room of digester building, which is located on the north side of the facility between the digester tank and sludge storage tank.

B.Environmental Elements

1. Earth

Find help answering earth questions[3]

a. General description of the site:

The Plan addresses boiler replacement at the City of Aberdeen WWTP near the mouth of the Chehalis River. The Chehalis flows into Grays Harbor about a mile downstream of the Aberdeen WWTP. Most of the wastewater treatment infrastructure on the WWTP Site is located within 200 feet of the Chehalis River. The area surrounding the Aberdeen WWTP is primarily developed as Port facilities with Pier E a few hundred feet downstream. A few natural areas are still interspersed along the Chehalis River through the City of Aberdeen.

Circle or highlight one: Flat, rolling, hilly, steep slopes, mountainous, other:

b. What is the steepest slope on the site (approximate percent slope)?

The steepest slope is less than 2 percent, and is a local slope for drainage etc. Within 30 feet of the shoreline, slopes up to 20 percent do exist.

c. What general types of soils are found on the site (for example, clay, sand, gravel, peat, muck)? If you know the classification of agricultural soils, specify them, and note any agricultural land of long-term commercial significance and whether the proposal results in removing any of these soils.

Soil types are identified in the current project GeoTechnical Report (PanGeo, 2021). The report summarize previous soil borings which indicate that the site is underlain by up to 15 feet of fill, up to 130 feet of estuarine deposits, and at least 15 feet of alluvium. Fill was described as loose to medium dense sand and gravel with variable amounts of silt, and containing a considerable amount of organics and wood debris, including timber cutoffs, sawdust and wood waste refuse from the site's past use as a sawmill and lumber storage facility. Estuarine deposits were described as very soft to stiff silt and clay and loose to medium dense sand. These layers are considered highly compressible based on previous laboratory testing. Alluvium was described as dense to very dense sand and gravel. The USGS Soil Survey indicates soils on the WWTP Site to be classified as Udorthents 100%, slope 1-2%. Udorthents are sandy loamy river dredgings on tideflats.

[3] https://ecology.wa.gov/regulations-permits/sepa/environmental-review/sepa-guidance/sepa-checklist-guidance/sepa-checklist-section-b-environmental-elements/environmental-elements-earth

d. Are there surface indications or history of unstable soils in the immediate vicinity? If so, describe.

While there are no surface indications of unstable soils in the project area, dredge spoils are subject to extreme liquefaction during earthquakes.

e. Describe the purpose, type, total area, and approximate quantities and total affected area of any filling, excavation, and grading proposed. Indicate source of fill.

N/A. Filling or grading is not proposed as part of this project / application.

f. Could erosion occur because of clearing, construction, or use? If so, generally describe.

No. Filling or grading is not proposed as part of this project / application.

g. About what percent of the site will be covered with impervious surfaces after project construction (for example, asphalt or buildings)?

No new impervious surfacing is proposed as part of this project / application. Currently, approximately 75 percent of the site not including the area occupied by buildings and treatment plant tanks is covered with asphalt paving or other impervious (gravel, roofing) surfacing.

h. Proposed measures to reduce or control erosion, or other impacts to the earth, if any.

None. Earthwork and / or ground disturbance is not proposed as part of this project / application.

2. Air

Find help answering air questions[4]

a. What types of emissions to the air would result from the proposal during construction, operation, and maintenance when the project is completed? If any, generally describe and give approximate quantities if known.

Boiler exhaust will continue to be exhausted from the boiler. No new sources of emissions are proposed as part of this project / application.

b. Are there any off-site sources of emissions or odor that may affect your proposal? If so, generally describe.

[4] https://ecology.wa.gov/Regulations-Permits/SEPA/Environmental-review/SEPA-guidance/SEPA-checklist-guidance/SEPA-Checklist-Section-B-Environmental-elements/Environmental-elements-Air

None known at this time.

c. **Proposed measures to reduce or control emissions or other impacts to air, if any:**

Maintaining the boiler in optimal condition for maximum efficiency. Additional system monitoring as required.

3. Water

Find help answering water questions[5]

a. **Surface:**
Find help answering surface water questions[6]

1. **Is there any surface water body on or in the immediate vicinity of the site (including year-round and seasonal streams, saltwater, lakes, ponds, wetlands)? If yes, describe type and provide names. If appropriate, state what stream or river it flows into.**

   The WWTP sits on the north shore of the Chehalis River Estuary. The WWTP outfall is located immediately south of the WWTP and extends into the Chehalis River upstream of Grays Harbor.

2. **Will the project require any work over, in, or adjacent to (within 200 feet) the described waters? If yes, please describe and attach available plans.**

   No.

3. **Estimate the amount of fill and dredge material that would be placed in or removed from surface water or wetlands and indicate the area of the site that would be affected. Indicate the source of fill material.**

   No dredging or construction is proposed as part of this project.

4. **Will the proposal require surface water withdrawals or diversions? Give a general description, purpose, and approximate quantities if known.**

   No.

[5] https://ecology.wa.gov/Regulations-Permits/SEPA/Environmental-review/SEPA-guidance/SEPA-checklist-guidance/SEPA-Checklist-Section-B-Environmental-elements/Environmental-elements-3-Water
[6] https://ecology.wa.gov/Regulations-Permits/SEPA/Environmental-review/SEPA-guidance/SEPA-checklist-guidance/SEPA-Checklist-Section-B-Environmental-elements/Environmental-elements-3-Water/Environmental-elements-Surface-water

5. **Does the proposal lie within a 100-year floodplain? If so, note location on the site plan.**

   Yes. According to FIRM Panel 53027C0904D (2-3-2017) the Aberdeen WWTP and much of the surrounding area is located within the 100-year floodplain, which is designated as Flood Zone AE.

6. **Does the proposal involve any discharges of waste materials to surface waters? If so, describe the type of waste and anticipated volume of discharge.**

   No.

b. Ground:

Find help answering ground water questions[7]

1. **Will groundwater be withdrawn from a well for drinking water or other purposes? If so, give a general description of the well, proposed uses and approximate quantities withdrawn from the well. Will water be discharged to groundwater? Give a general description, purpose, and approximate quantities if known.**

   No.

2. **Describe waste material that will be discharged into the ground from septic tanks or other sources, if any (domestic sewage; industrial, containing the following chemicals…; agricultural; etc.). Describe the general size of the system, the number of such systems, the number of houses to be served (if applicable), or the number of animals or humans the system(s) are expected to serve.**

   N/A. No groundwater discharges are proposed as part of this project / application.

c. Water Runoff (including stormwater):

1. **Describe the source of runoff (including storm water) and method of collection and disposal, if any (include quantities, if known). Where will this water flow? Will this water flow into other waters? If so, describe.**

   Runoff at the Aberdeen WWTP will either be routed to the existing storm water collection system and discharged via the existing storm water outfall into Chehalis River, or collected on the site and routed through the WWTP for treatment, prior to discharge.

[7] https://ecology.wa.gov/Regulations-Permits/SEPA/Environmental-review/SEPA-guidance/SEPA-checklist-guidance/SEPA-Checklist-Section-B-Environmental-elements/Environmental-elements-3-Water/Environmental-elements-Groundwater

2. **Could waste materials enter ground or surface waters? If so, generally describe.**

   No waste materials will enter ground or surface waters associated with approval of the Boiler Replacement Plan.

3. **Does the proposal alter or otherwise affect drainage patterns in the vicinity of the site? If so, describe.**

   Drainage patterns will not be affected by this project.

d. **Proposed measures to reduce or control surface, ground, and runoff water, and drainage pattern impacts, if any:**

   None required as surface, ground, and runoff water, and drainage patterns will not be altered.

4. Plants

Find help answering plants questions

a. **Check the types of vegetation found on the site:**

   ☒ **deciduous tree: alder, maple, aspen, other**

   ☒ **evergreen tree: fir, cedar, pine, other**

   ☒ **shrubs**

   ☒ **grass**

   ☐ **pasture**

   ☐ **crop or grain**

   ☐ **orchards, vineyards, or other permanent crops.**

   ☐ **wet soil plants: cattail, buttercup, bullrush, skunk cabbage, other**

   ☐ **water plants: water lily, eelgrass, milfoil, other**

   ☐ **other types of vegetation**

b. **What kind and amount of vegetation will be removed or altered?**

   No vegetation will be removed associated with review and approval of the Boiler Replacement project.

c. **List threatened and endangered species known to be on or near the site.**

   The USFWS IPaC Species List for the project generated on January 17, 2024 did not include any Endangered Species Act (ESA)-protected plant species.

d. Proposed landscaping, use of native plants, or other measures to preserve or enhance vegetation on the site, if any.

No new landscaping is proposed as part of this project.

e. List all noxious weeds and invasive species known to be on or near the site.

The Grays Harbor County Noxious Weeds List was reviewed and several species of Spartina, a non-native cordgrass were noted as Class A Weeds that may be present downstream of the project site in Grays Harbor.

5. Animals

Find help answering animal questions[8]

a. List any birds and other animals that have been observed on or near the site or are known to be on or near the site.

Examples include:

- **Birds: hawk, heron, eagle, songbirds, other:**
- **Mammals: deer, bear, elk, beaver, otters, other:**
- **Fish: bass, salmon, trout, herring, shellfish, other:**

b. List any threatened and endangered species known to be on or near the site.

The US Fish & Wildlife Information, Planning and Consultation (IPaC) database Official Species List for the project area on January 17, 2024 included the following species: Marbled Murrelet, Yellow-billed Cuckoo and Bull Trout. The mouth of the Chehalis River is regarded as Critical Habitat for bull trout. There are currently no ESA-listed salmonids under National Marine Fisheries Service (NMFS) jurisdiction in Grays Harbor or the Chehalis River. ESA-threatened green sturgeon utilize habitat in Grays Harbor and could be present near the mouth of the Chehalis River.

c. Is the site part of a migration route? If so, explain.

Pacific salmonids migrate past the Aberdeen WWTP annually. Also, Aberdeen and Grays Harbor are part of the Pacific Flyway for migratory waterfowl. Green sturgeon migrate along the west coast and feed in Grays Harbor in route to Alaska.

[8] https://ecology.wa.gov/Regulations-Permits/SEPA/Environmental-review/SEPA-guidance/SEPA-checklist-guidance/SEPA-Checklist-Section-B-Environmental-elements/Environmental-elements-5-Animals

d. Proposed measures to preserve or enhance wildlife, if any.

Upgrading the digester gas boiler at the Aberdeen WWTP will improve the efficiency of energy conversion and transmission, thus potentially reduce the carbon foot print and improve the quality of fish and wildlife habitat in the surrounding Chehalis River and Grays Harbor.

e. List any invasive animal species known to be on or near the site.

None known.

6. Energy and natural resources

Find help answering energy and natural resource questions[9]

a. What kinds of energy (electric, natural gas, oil, wood stove, solar) will be used to meet the completed project's energy needs? Describe whether it will be used for heating, manufacturing, etc.

Primarily digester gas collected from the existing anaerobic digesters. Propane will also be used as required to supplement the digester gas or when the digestion process is out of service for maintenance.

b. Would your project affect the potential use of solar energy by adjacent properties? If so, generally describe.

There would be no impact to potential solar use by the WWTP or adjacent properties as a result of this project.

c. What kinds of energy conservation features are included in the plans of this proposal? List other proposed measures to reduce or control energy impacts, if any.

The upgraded boiler will be designed and maintained in optimal condition to maximize efficiency and minimize electrical requirements.

7. Environmental health

Health Find help with answering environmental health questions[10]

[9] https://ecology.wa.gov/Regulations-Permits/SEPA/Environmental-review/SEPA-guidance/SEPA-checklist-guidance/SEPA-Checklist-Section-B-Environmental-elements/Environmental-elements-6-Energy-natural-resou

[10] https://ecology.wa.gov/Regulations-Permits/SEPA/Environmental-review/SEPA-guidance/SEPA-checklist-guidance/SEPA-Checklist-Section-B-Environmental-elements/Environmental-elements-7-Environmental-health

a. **Are there any environmental health hazards, including exposure to toxic chemicals, risk of fire and explosion, spill, or hazardous waste, that could occur because of this proposal? If so, describe.**

Digester gas is flammable and explosive. Sophisticated monitoring systems are in place at the WWTP to significantly reduce the risk of explosions and safety hazards.

1. **Describe any known or possible contamination at the site from present or past uses.**

   None known at this time.

2. **Describe existing hazardous chemicals/conditions that might affect project development and design. This includes underground hazardous liquid and gas transmission pipelines located within the project area and in the vicinity.**

   None known at this time, and none are believed to exist.

3. **Describe any toxic or hazardous chemicals that might be stored, used, or produced during the project's development or construction, or at any time during the operating life of the project.**

   None known at this time. Storage of hazardous chemicals is not proposed as part of this project.

4. **Describe special emergency services that might be required.**

   None known at this time. In the unlikely event of an explosion, fire and medical services would be required.

5. **Proposed measures to reduce or control environmental health hazards, if any.**

   No new environmental hazards are anticipated as part of this project. Similar to current operation, the boiler is maintained to optimize its performance. Open flames are prohibited within the boiler room. Gas monitoring systems are in place for this facility. Storage of liquids and / or chemicals is restricted within the boiler room.

b. **Noise**

1. **What types of noise exist in the area which may affect your project (for example: traffic, equipment, operation, other)?**

   None known at this time.

2. **What types and levels of noise would be created by or associated with the project on a short-term or a long-term basis (for example: traffic, construction, operation, other)? Indicate what hours noise would come from the site)?**

   None known at this time.

3. **Proposed measures to reduce or control noise impacts, if any:**

   None. No modifications or noise control are required as part of this Project / application.

8. Land and shoreline use

Find help answering land and shoreline use questions[11]

a. **What is the current use of the site and adjacent properties? Will the proposal affect current land uses on nearby or adjacent properties? If so, describe.**

   The existing WWTP site and adjacent properties are zoned for industrial use. Their current uses are consistent with the existing zoning classification. The WWTP site is used for treatment of wastewater from Aberdeen, Cosmopolis and Stafford Creek Corrections Center. The adjacent sites are used for construction equipment and materials storage. The proposed project will not affect the existing land use of the WWTP site or adjacent properties.

b. **Has the project site been used as working farmlands or working forest lands? If so, describe. How much agricultural or forest land of long-term commercial significance will be converted to other uses because of the proposal, if any? If resource lands have not been designated, how many acres in farmland or forest land tax status will be converted to nonfarm or nonforest use?**

   There are no records or reports that the site has ever been used for farming or other agricultural purposes.

   1. **Will the proposal affect or be affected by surrounding working farm or forest land normal business operations, such as oversize equipment access, the application of pesticides, tilling, and harvesting? If so, how?**

      The project will not affect neighboring agricultural lands or activities.

c. **Describe any structures on the site.**

   The Aberdeen WWTP consists of a Control Building, influent pump station, headworks structure, two primary and three secondary clarifiers, two aeration basins, a blower

[11] https://ecology.wa.gov/Regulations-Permits/SEPA/Environmental-review/SEPA-guidance/SEPA-checklist-guidance/SEPA-Checklist-Section-B-Environmental-elements/Environmental-elements-8-Land-shoreline-use

building, a disinfection and sludge pumping building and a covered reinforce concrete tank farm containment canopy building for storage of disinfection and dechlorination chemicals, a final effluent flow metering and outfall structure, a gravity thickener, one functioning large digester and control building and two non-functional small sludge storage tanks and abandoned digester control building, a solids handling building, a covered dewatered biosolids loading bay, an emergency generator building, a shop/equipment storage building and a multiple bay covered storage area and magnesium hydroxide storage tank and a hauled waste dump station. Chlorination and Dechlorination facilities are accommodated in the disinfection and sludge pumping building and adjacent area. The WWTP discharges to the Chehalis River through a submarine outfall.

d. Will any structures be demolished? If so, what?

No structures will be demolished as part of this project.

e. What is the current zoning classification of the site?

Industrial

f. What is the current comprehensive plan designation of the site?

Industrial

g. If applicable, what is the current shoreline master program designation of the site?

According to the Aberdeen/Hoquiam/Cosmopolis Shoreline Master Program (4/24/2014), the southern-most 200 feet of the Aberdeen WWTP Site is within "Preliminary Shoreline Jurisdiction." The area for the proposed work is north and outside of the Preliminary Shoreline Jurisdiction.

h. Has any part of the site been classified as a critical area by the city or county? If so, specify.

The Aberdeen WWTP is located in floodplain and shoreline areas that are classified as a City of Aberdeen Critical Areas (AMC 14.100).

i. Approximately how many people would reside or work in the completed project?

No persons would reside in the completed project. No additional workers are proposed as part of this project / application. The WWTP utilizes a staff of 13 employees, all of whom may work within the completed project at some point in time.

j. Approximately how many people would the completed project displace?

The completed project would not displace any persons.

k. Proposed measures to avoid or reduce displacement impacts, if any.

None. No persons will be displaced as a result of this project / Application.

l. Proposed measures to ensure the proposal is compatible with existing and projected land uses and plans, if any.

None. System has been in operation for many years and no modifications are proposed as part of this project / application.

m. Proposed measures to reduce or control impacts to agricultural and forest lands of long-term commercial significance, if any:

None. No modifications are proposed as part of this project /application.

9. Housing

Find help answering housing questions[12]

a. Approximately how many units would be provided, if any? Indicate whether high, middle, or low-income housing.

No additional housing units are proposed as part of this project / Application.

b. Approximately how many units, if any, would be eliminated? Indicate whether high, middle, or low-income housing.

No housing units would be eliminated as part of this project / application.

c. Proposed measures to reduce or control housing impacts, if any:

None required at this time.

[12] https://ecology.wa.gov/Regulations-Permits/SEPA/Environmental-review/SEPA-guidance/SEPA-checklist-guidance/SEPA-Checklist-Section-B-Environmental-elements/Environmental-elements-9-Housing

10. Aesthetics

Find help answering aesthetics questions[13]

a. **What is the tallest height of any proposed structure(s), not including antennas; what is the principal exterior building material(s) proposed?**

   N/A. No buildings are proposed as part of this project.

b. **What views in the immediate vicinity would be altered or obstructed?**

   N/A. No buildings are proposed as part of this project.

c. **Proposed measures to reduce or control aesthetic impacts, if any:**

   N/A. No buildings are proposed as part of this project.

11. Light and glare

Find help answering light and glare questions[14]

a. **What type of light or glare will the proposal produce? What time of day would it mainly occur?**

   N/A. No modifications are proposed as part of this project.

b. **Could light or glare from the finished project be a safety hazard or interfere with views?**

   No.

c. **What existing off-site sources of light or glare may affect your proposal?**

   None.

d. **Proposed measures to reduce or control light and glare impacts, if any:**

   None required.

[13] https://ecology.wa.gov/Regulations-Permits/SEPA/Environmental-review/SEPA-guidance/SEPA-checklist-guidance/SEPA-Checklist-Section-B-Environmental-elements/Environmental-elements-10-Aesthetics
[14] https://ecology.wa.gov/Regulations-Permits/SEPA/Environmental-review/SEPA-guidance/SEPA-checklist-guidance/SEPA-Checklist-Section-B-Environmental-elements/Environmental-elements-11-Light-glare

12. Recreation

Find help answering recreation questions

a. **What designated and informal recreational opportunities are in the immediate vicinity?**

   There is a boat launching facility just upstream of the Aberdeen WWTP and there are park facilities upstream of the boat launch. Recreational opportunities in Grays Harbor downstream of the project area include boating, fishing and crabbing.

b. **Would the proposed project displace any existing recreational uses? If so, describe.**

   No.

c. **Proposed measures to reduce or control impacts on recreation, including recreation opportunities to be provided by the project or applicant, if any:**

   None required. No modifications are proposed as part of this project.

13. Historic and cultural preservation

Find help answering historic and cultural preservation questions[15]

a. **Are there any buildings, structures, or sites, located on or near the site that are over 45 years old listed in or eligible for listing in national, state, or local preservation registers? If so, specifically describe.**

   Some buildings on the existing site are over 60 years old; however, none are known to be eligible for listing on any national, state or local historic register.

b. **Are there any landmarks, features, or other evidence of Indian or historic use or occupation? This may include human burials or old cemeteries. Are there any material evidence, artifacts, or areas of cultural importance on or near the site? Please list any professional studies conducted at the site to identify such resources.**

   None known at this point in time.

c. **Describe the methods used to assess the potential impacts to cultural and historic resources on or near the project site. Examples include consultation with tribes and the department of archeology and historic preservation, archaeological surveys, historic maps, GIS data, etc.**

[15] https://ecology.wa.gov/Regulations-Permits/SEPA/Environmental-review/SEPA-guidance/SEPA-checklist-guidance/SEPA-Checklist-Section-B-Environmental-elements/Environmental-elements-13-Historic-cultural-p

None required. No ground disturbing activities are proposed as part of this project / application.

d. Proposed measures to avoid, minimize, or compensate for loss, changes to, and disturbance to resources. Please include plans for the above and any permits that may be required.

None required. No ground disturbing activities are proposed as part of this project / application.

14. Transportation

Find help with answering transportation questions[16]

a. Identify public streets and highways serving the site or affected geographic area and describe proposed access to the existing street system. Show on site plans, if any.

The WWTP is accessed near the intersection of S. Garfield Street and W. Heron Street in Aberdeen, Washington. Access is provided via a single driveway as indicated by the blue arrow in the aerial map below. The proposed project will not impact local traffic or access to the WWTP.

b. Is the site or affected geographic area currently served by public transit? If so, generally describe. If not, what is the approximate distance to the nearest transit stop?

The nearest local transit stop is within 1 mile of the WWTP along W. Heron Street. Transit service will not be affected by the proposes project / application

c. Will the proposal require any new or improvements to existing roads, streets, pedestrian, bicycle, or state transportation facilities, not including driveways? If so, generally describe (indicate whether public or private).

No infrastructure improvements to roads or transit facilities are required as a result of this project.

d. Will the project or proposal use (or occur in the immediate vicinity of) water, rail, or air transportation? If so, generally describe.

No direct use. BNSF rail line runs along the north property line. The rail traffic can frequently close all access to and from the WWTP for up to an hour or more a few times per day. This is not predictable but can affect the delivery of equipment/materials to the site and the ability of first responders to access the site.

[16] https://ecology.wa.gov/Regulations-Permits/SEPA/Environmental-review/SEPA-guidance/SEPA-checklist-guidance/SEPA-Checklist-Section-B-Environmental-elements/Environmental-elements-14-Transportation

e. **How many vehicular trips per day would be generated by the completed project or proposal? If known, indicate when peak volumes would occur and what percentage of the volume would be trucks (such as commercial and nonpassenger vehicles). What data or transportation models were used to make these estimates?**

The proposed project will not increase/decrease the number of vehicle trips to the WWTP or the project location.

f. **Will the proposal interfere with, affect, or be affected by the movement of agricultural and forest products on roads or streets in the area? If so, generally describe.**

The proposed project will not impact any agricultural components or transit thereof.

g. **Proposed measures to reduce or control transportation impacts, if any:**

None required. The proposed project will not impact transportation facilities.

15. Public services

Find help answering public service questions[17]

a. **Would the project result in an increased need for public services (for example: fire protection, police protection, public transit, health care, schools, other)? If so, generally describe.**

None. The proposed project will not impact transportation facilities.

b. **Proposed measures to reduce or control direct impacts on public services, if any.**

None Required. Public services will not be affected as part of this project / application.

16. Utilities

Find help answering utilities questions[18]

a. **Circle utilities currently available at the site: electricity, natural gas, water, refuse service, telephone, sanitary sewer, septic system, other:**

b. **Describe the utilities that are proposed for the project, the utility providing the service, and the general construction activities on the site or in the immediate vicinity which might be needed.**

[17] https://ecology.wa.gov/regulations-permits/sepa/environmental-review/sepa-guidance/sepa-checklist-guidance/sepa-checklist-section-b-environmental-elements/environmental-elements-15-public-services
[18] https://ecology.wa.gov/regulations-permits/sepa/environmental-review/sepa-guidance/sepa-checklist-guidance/sepa-checklist-section-b-environmental-elements/environmental-elements-16-utilities

None. Utilities will not be affected as part of this project / application.

C.Signature

Find help about who should sign[19]

The above answers are true and complete to the best of my knowledge. I understand that the lead agency is relying on them to make its decision.

X

Type name of signee: Nancy E. Lockett

Position and agency/organization: Engineer, Gray & Osborne, Inc.

Date submitted: January 22, 2024

[19] https://ecology.wa.gov/Regulations-Permits/SEPA/Environmental-review/SEPA-guidance/SEPA-checklist-guidance/SEPA-Checklist-Section-C-Signature

FORM 4
FACILITY EMISSIONS SUMMARY

Facility: Aberdeen WWTP

Instructions: on back.

Emission Unit ID#	TSP	PM-10	SOx	NOx	VOC	CO
Digester Gas Boiler (lb/yr)	NA	NA	38.5	169.0	NA	0
Facility Total	NA	NA	38.5	169.0	NA	0

INSTRUCTIONS
FORM 4: FACILITY EMISSIONS SUMMARY

Provide estimates of emissions of all criteria pollutants in tons per year. Emissions estimates should be based on the maximum potential to emit. **"Potential to emit"** means the maximum capacity to emit air contaminants under physical and operational design limitations.

Emission rates or factors used in calculating annual potential emissions may be based on source test results, vendor guaranteed emission rates or concentrations, EPA approved emission factors from the EPA publication Compilation of Air Pollutant Emission Factors, Volume I: Stationary Point and Area Source (AP-42), or other basis as approved by ORCAA. All data, assumptions, and calculations used in calculating potential emissions must be documented and included with the NOC application as an attachment. The following detailed instructions apply:

1. For emission rates based on source test information, please provide a one page summary of the source test results which includes the name of the testing firm, the test date, and reference to the methods used.

2. For emission estimates based on vendor guarantees, please provide a signed and dated copy of the guarantee from the vendor.

3. For calculated emissions rates, please provide details of all assumptions, operational data, calculations, and other pertinent information used in calculating the annual emissions.

DIGESTER GAS AND EMISSIONS SUMMARY

PARAMETER	2022	2023	Average
ANNUAL GAS PRODUCED (cf)	6,346,974	6,536,353	6,441,664
ANNUAL TOTAL TO BOILER (cf)	3,763,218	3,279,650	3,521,434
O_2 (%)	5.3		
CO_2 (%)	8.8		
CO (ppm)	0		
NOx (ppm)	20		
H_2S (ppm)	33		
CO (lb/year)	0	0	0
NOx (lb/year) (1)	180.6	157.4	169.0
SO_2 (lb/year) (2)	41.1	35.8	38.5

(1) Calculated using an estimated emission factor of 0.04 lb/MMBtu and that the boiler is operated at its maximum heat input of 2.0 MMBtu.

(2) Calculated assuming all H_2S in Digester Gas is emitted as SO_2 and that the boiler is operated at its maximum heat input of 2.0 MMBtu.

SO_2 Emission Estimates

Hourly Emission Rates at Full Boiler Capacity

Boiler Heat Input Capacity (Btu/hr) =	2,000,000	Conseratively assumes boiler is at full fire when operating
Heat Content of Biogas (Btu/ft^3)	600	
H_2S concentration (ppm) =	33	average based on three samples taken
Biogass Emission Rate (ft^3/hr) =	3,333	
H_2S Emission Rate (lbs H_2S/hr) =	0.0097	= (biogas emission rate (ft^3/hr))*(H_2S concentration (ppm)/1,000,000 ft^3 biogas)*(0.088 lb H_2S/ft^3 H_2S)
SO_2 Emission Rate (lbs SO_2/hr) =	0.0182	=H_2S emission rate * (1.88 lbs SO_2/lb H_2S)